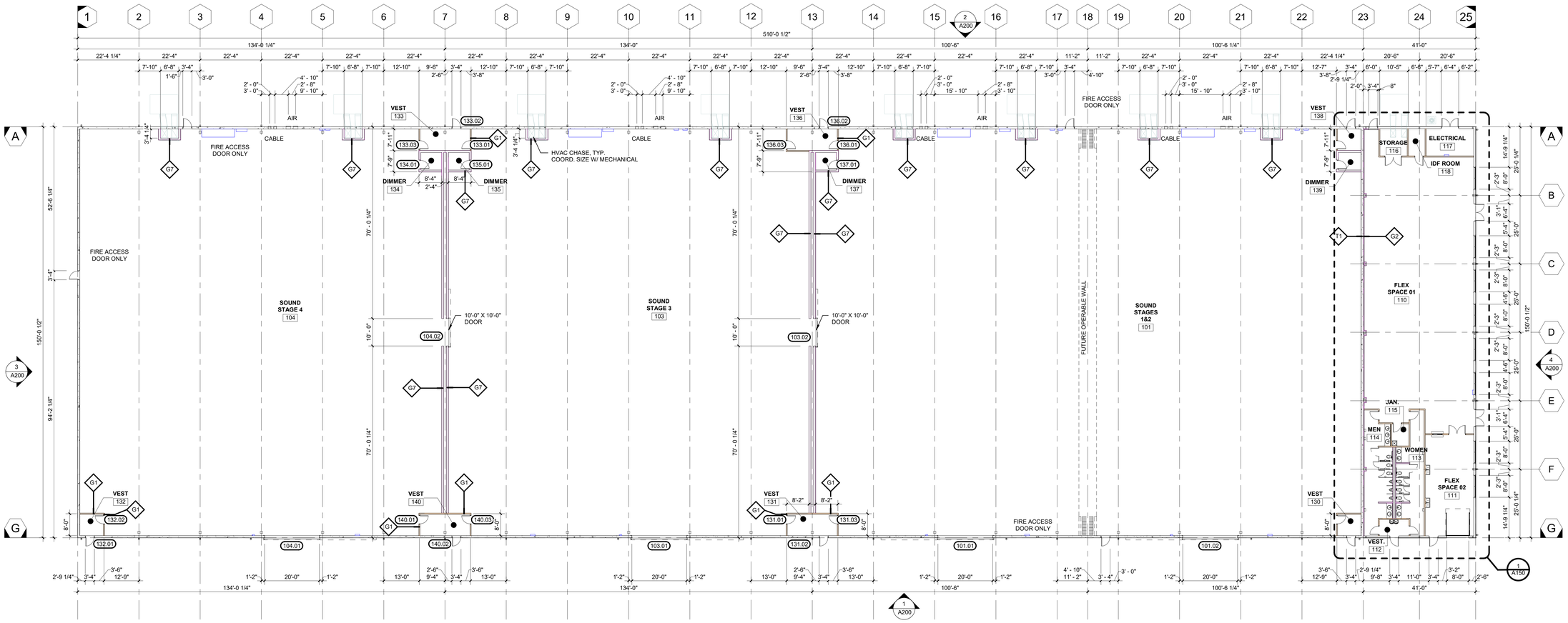

1 A100 OVERALL FLOOR PLAN
SCALE: 1/16" = 1'-0"

N
PROJECT NORTH

KEY PLAN

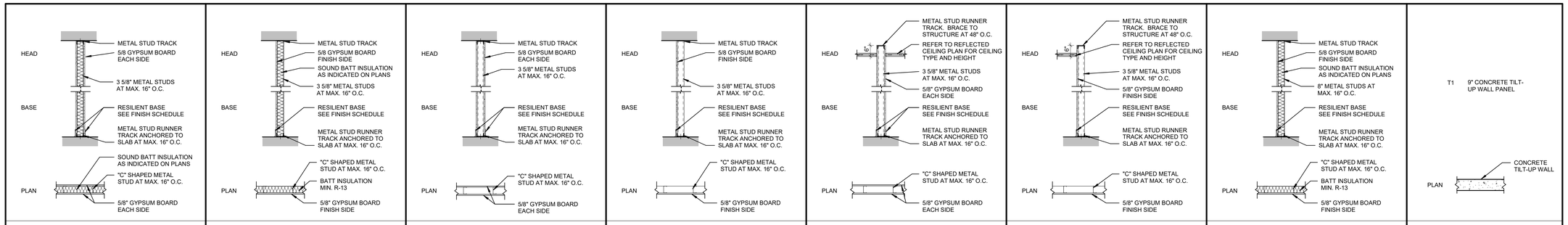

PARTITION TYPE "G1" | PARTITION TYPE "G2" | PARTITION TYPE "G3" | PARTITION TYPE "G4" | PARTITION TYPE "G5" | PARTITION TYPE "G6" | PARTITION TYPE "G7" | PARTITION TYPE "T1"

GRIFFCO
1701 BARRETT LAKES BLVD.
SUITE 285
KENNESAW, GA 30144
PHONE: (770) 422-5420

STATE OF GEORGIA
ERIC COBBS
CERTIFICATE NO. RA014423
REGISTERED ARCHITECT

11/10/2022

Copyright of Griffco Design/Build Inc. This drawing is the property of Griffco Design/Build Inc. and is submitted in confidence. Any unauthorized use is strictly not permitted.

CAPSTONE SOUTH

INDIAN CREEK STUDIOS STAGE BUILDING D

3963 REDAN ROAD,
DEKALB COUNTY, GA

PERMIT	02/22/22
COMMENTS	06/23/22
COMMENTS	08/23/22
ELEC COORD	09/09/22

JOB NUMBER: 2021-277

SHEET TITLE:
OVERALL FLOOR PLAN

SHEET NUMBER: A100